26 418 000 **EUPHORIA SYSTEM 180 E SHOWER SYSTEM WITH THERMOSTAT FOR WALL MOUNTING**

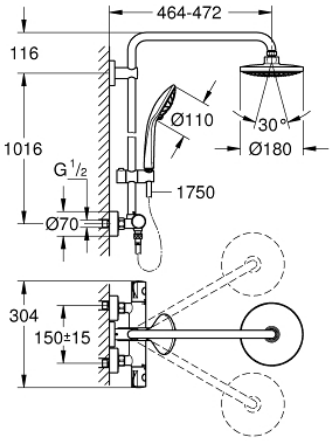

TOOTE KIRJELDUS

- Värvus: chrome
- consisting of:
- horizontal swivable 450 mm shower arm
- exposed thermostat with Aquadimmer function
- with ergonomic handles
- allows change between:
- Euphoria Cosmopolitan 180 head shower (27 491 000)
- spray pattern: Rain
- with ball joint
- rotation angle ± 15°
- hand shower Euphoria 110 Massage (27 221 000)
- adjustable in height with gliding element
- Silverflex shower hose 1750 mm (28 388)
- GROHE TurboStat compact cartridge with wax thermoelement
- GROHE SafeStop at 38°C
- GROHE SafeStop Plus optional temperature limiter at 43°C included
- GROHE DreamSpray perfect spray pattern
- GROHE Long-Life finish
- SpeedClean anti-lime system
- Inner WaterGuide for a longer life
- TwistStop to prevent hose from twisting
- suitable for instantaneous heaters from 18 kW/h
- minimum flow rate 7 l/min.

26 418 000 **EUPHORIA SYSTEM 180 E SHOWER SYSTEM WITH THERMOSTAT FOR WALL MOUNTING**

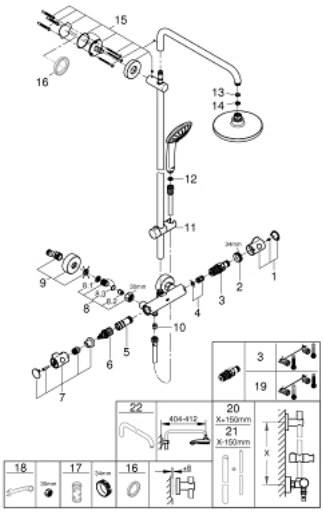

VARUOSAD, juuli 2016 – nüüd

1: Temperature control handle (Tellimuse number 47981000)

2: Fitting ring (Tellimuse number 47743000)

3: Thermostatic compact cartridge 1/2" (Tellimuse number 47439000)

4: Buffer (Tellimuse number 47398000)

5: Water flow (Tellimuse number 47751000)

6: Aquadimmer (Tellimuse number 12433000)

7: Shut-off handle Aquadimmer (Tellimuse number 49056000)

8: Non-return valve (Tellimuse number 47189000)

8.1: Dirt strainer (Tellimuse number 0726400M)

8.2: Non-return valve (Tellimuse number 08565000)

8.3: O-ring ø 17 x ø 2 (Tellimuse number 0305500M)

9: S-union (Tellimuse number 12662000)

10: Non-return valve (Tellimuse number 08565000)

11: Glide element (Tellimuse number 12140000)

12: Dirt strainer (Tellimuse number 0700200M)

13: Fibre seal Ø 18,5 x Ø 12 x 2 (Tellimuse number 0138900M)

14: Dirt strainer (Tellimuse number 48007000)

15: Shower bar holder (Tellimuse number 48279000)

16: Compensation disc (Tellimuse number 27180000)*

17: Socket spanner (Tellimuse number 19332000)*

18: Special spanner (Tellimuse number 19377000)*

19: GROHE TurboStat cartridge 1/2" (Tellimuse number 47175000)*

20: Shower system pipe for retrofitting (Tellimuse number 48053000)*

21: Shower system pipe for retrofitting (Tellimuse number 48054000)*

22: Shower arm for shower systems (Tellimuse number 14047000)*

* Lisatarvikud